JC3504 Robot Technology

Lecture 4: Forward Kinematics

Manipulator Kinematics

Manipulator Kinematics primarily studies the laws of motion of robotic arms in space, without delving into the cause-and-effect relationship between force and motion. It encompasses two main parts:

- Forward Kinematics
- Inverse Kinematics *(covered in next lecture)*

Forward Kinematics

Forward Kinematics calculates the position and orientation of the robotic arm's end-effector (r) based on the joint parameters of the arm (q). q is a vector consists of the joint angles. That is to find a function f such that:

$$ {}^{S}_{T}T = f(q) $$

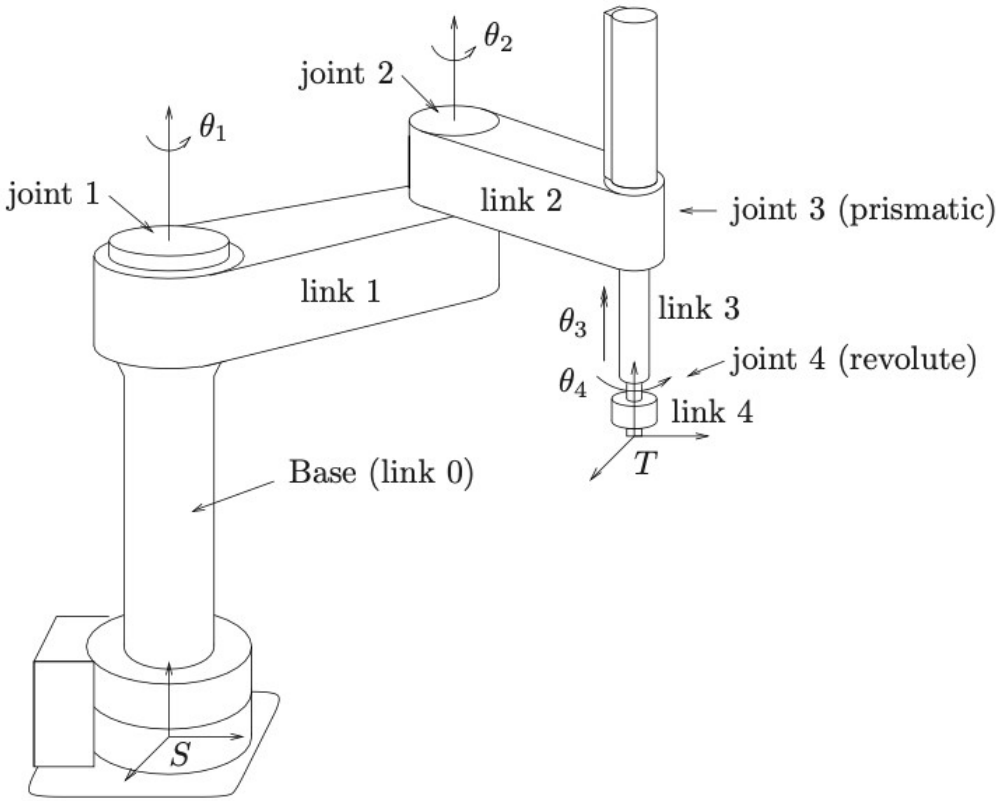

Inverse Kinematics *(covered in next lecture)*

Inverse Kinematics calculates the joint parameters required to achieve a desired position and orientation of the end-effector.

i.e. given the position and orientation of the end-effector ${}^{S}_{T}T$, with the lengths of links, what are the joint angles (θs)?

$$q = f^{-1}\left({}^{S}_{T}T\right)$$

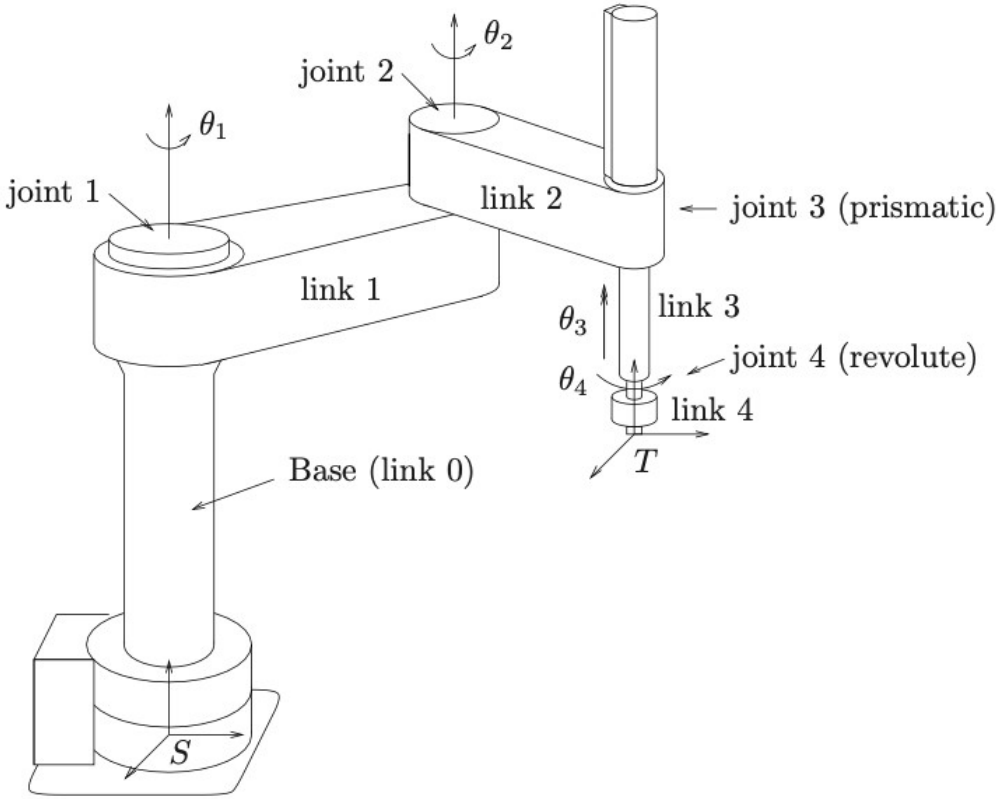

Outline

Forward Kinematics

- Link Description
- Affixing Frames To Links
- Derivation of Link Transformations
- Examples

Link Description

Link Description

A manipulator may be thought of as a set of bodies connected in a chain by joints. These bodies are called links. Joints form a connection between a neighbouring pair of links. The term lower pair is used to describe the connection between a pair of bodies when the relative motion is characterised by two surfaces sliding over one another.

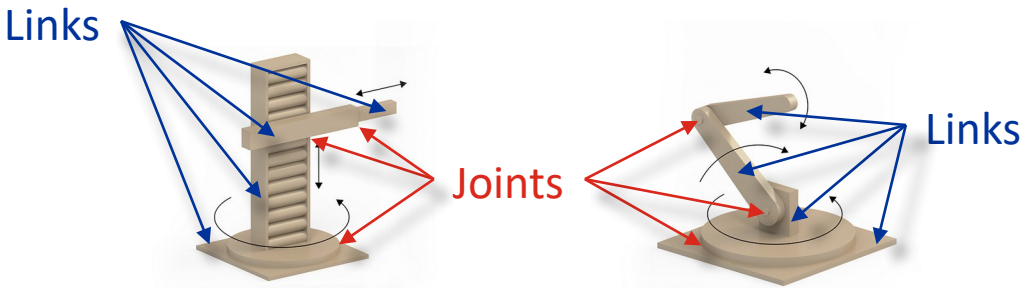

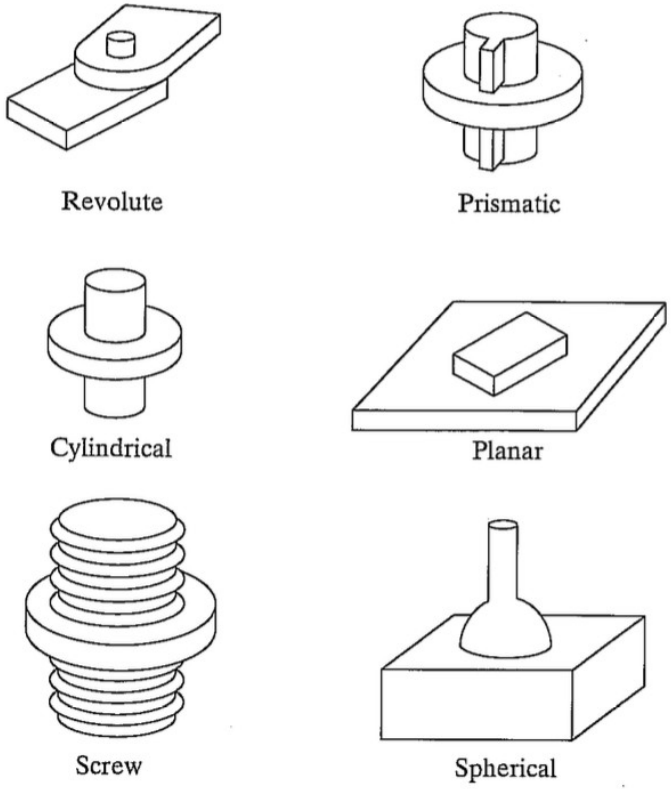

The six possible lower pairs

Link Description

Base: The base is the support point of the operating arm, fixing the entire robotic arm system and providing a stable working platform for the robotic arm.

End-effector: The end-effector is located at the end of the operating arm and directly contacts and interacts with the work object, such as a gripper, welding gun or paint sprayer.

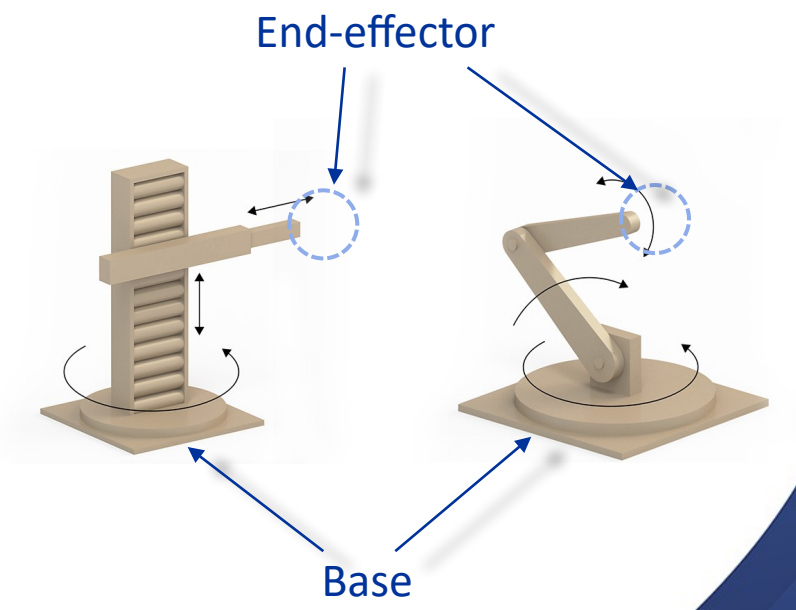

Link Description

- Mechanical-design considerations favour manipulators' generally being constructed from joints that exhibit just one degree of freedom. Most manipulators have revolute joints or have sliding joints called prismatic joints.
- A joint having n degrees of freedom can be modelled as n joints of one degree of freedom connected with $n - 1$ links of zero length.
- To position an end-effector generally in 3-space, a minimum of six joints is required.

Link Description

- The links are numbered starting from the immobile base of the arm, which might be called link 0. The first moving body is link 1, and so on, out to the free end-effector of the arm, which is link n.
- Links are considered only as a rigid body that defines the relationship between two neighbouring joint axes of a manipulator.

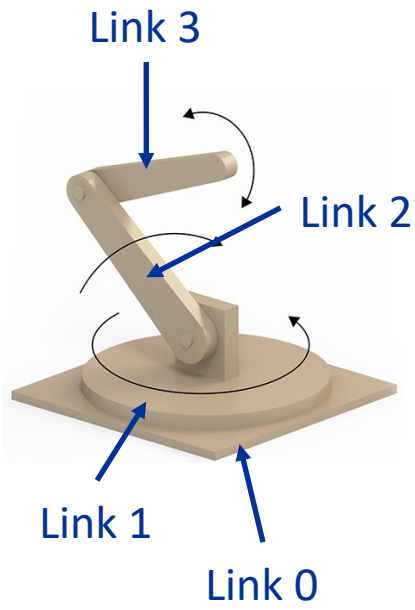

Joint Types

The joints of the operating arm are mainly divided into two categories: rotating joints and moving joints.

- Rotary Joints: allow the robotic arm to rotate around a fixed axis.
- Moving joints (Linear Joints): Moving joints allow the robot arm to move in a straight direction.

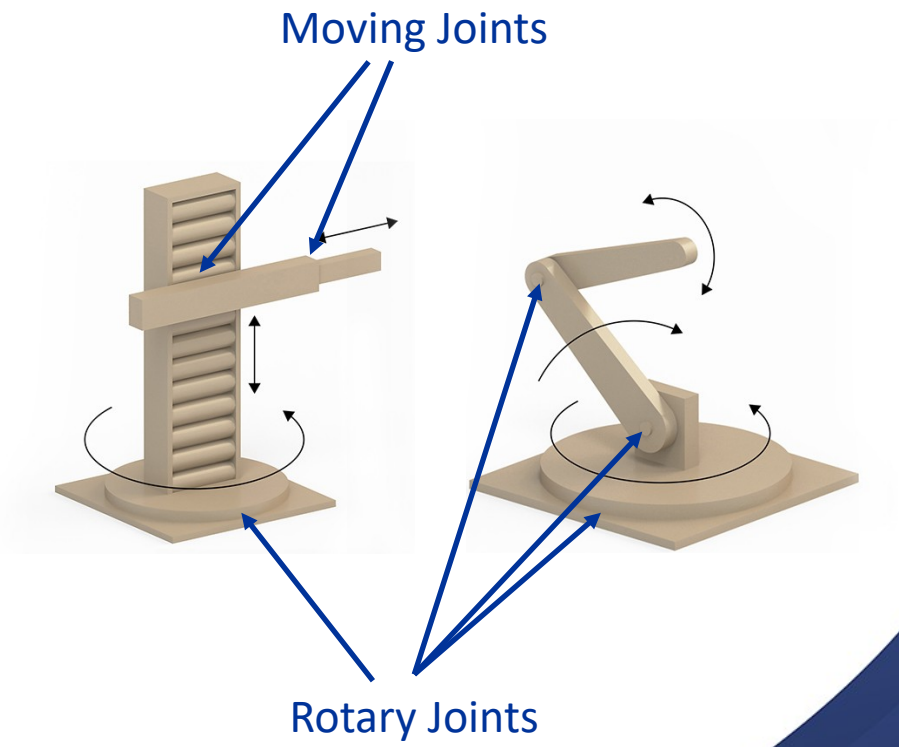

Denavit-Hartenberg (D-H) Parameters

Denavit-Hartenberg (D-H) parameters are a standardised method for describing the relative position and attitude between links and joints. Through this method, the representation of robot kinematics can be systematically simplified to facilitate the calculation of forward or inverse kinematics.

- Link length (a)
- Offset (d)
- Joint angle (θ) or Rotation angle
- Twist angle (α)

Link Length (a) and Link Offset (d)

- The distance between axis i and axis $i+1$ is called the link length, denoted by a_i.
- link offset (d_{i+1}) is the distance between the end of link i and link $i+1$

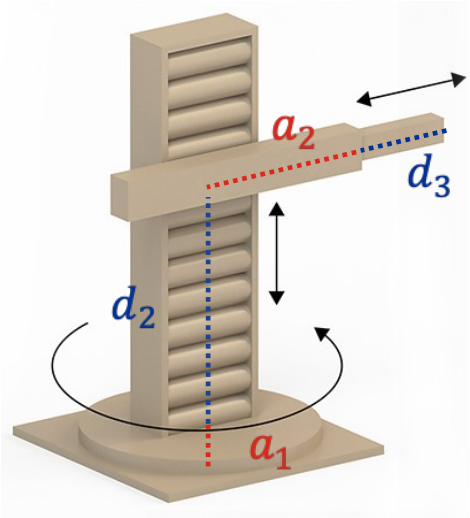

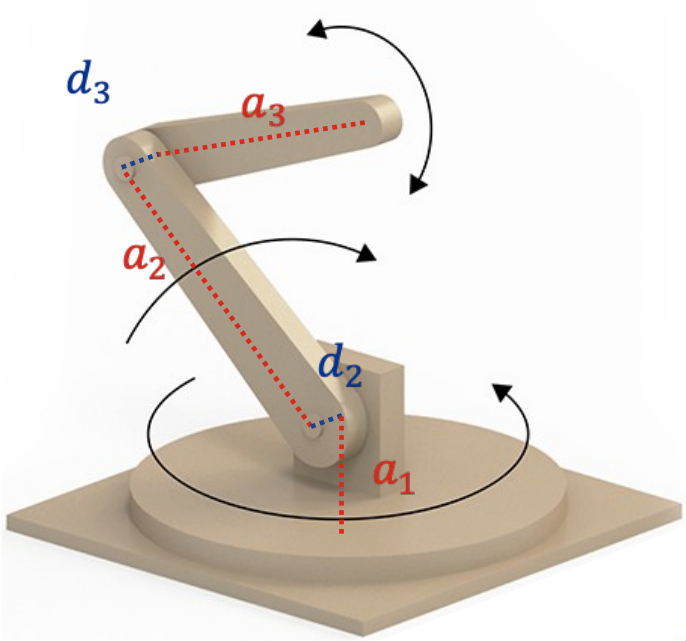

Link Length (a) and Link Offset (d)

- For any arbitrary two axes (axis $i-1$ and i) in $\mathbb{R}^3$ (3-space), the link length a_{i-1} is measured along a line that is mutually perpendicular to both axes.
- We assign $a_0 = a_n = 0$ for the first and last links .
- The link offset d_i is the distance between two perpendicular points is the distance between the perpendicular points of a_{i-1} and a_i on the common axis

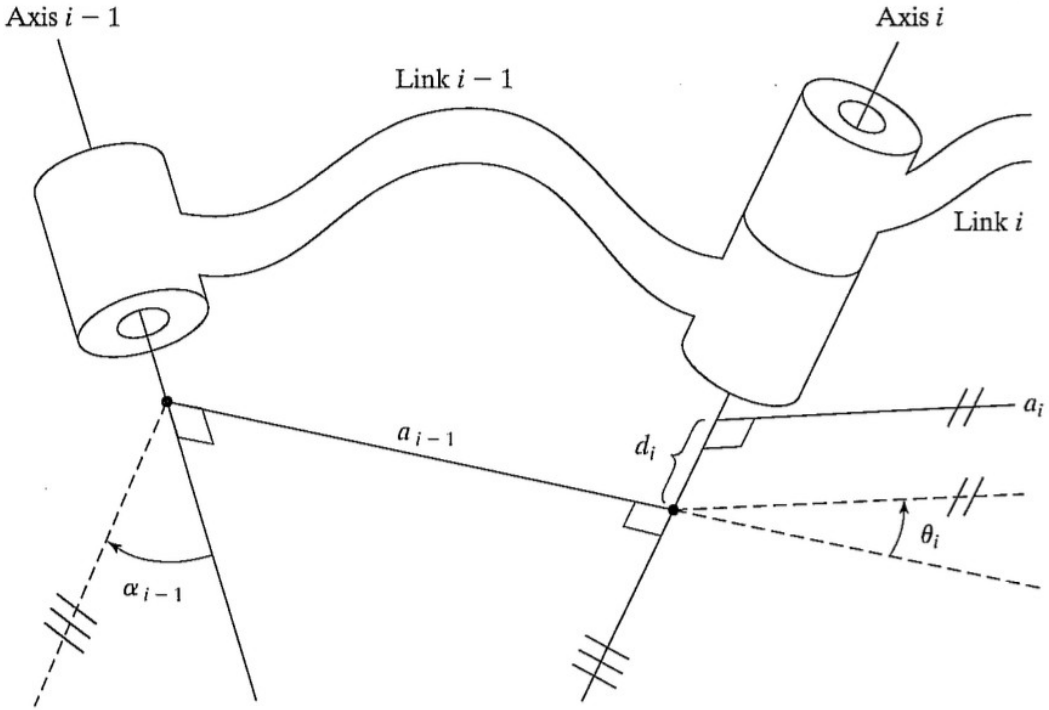

Joint Angle (θ) and Twist Angle (α)

- Joint Angle (θ) is the angle between two links.
- Twist angle (α) is the rotation angle with the direction of the link as the axis.

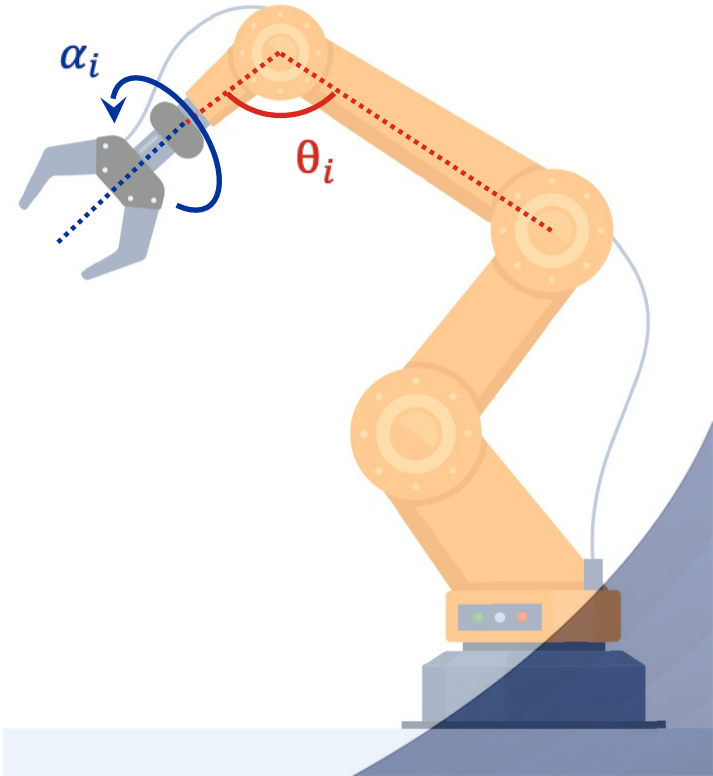

Overall Description to D-H Parameters

<video: 04 - Denavit-Hartenberg Reference Frame Layout.mp4>

Affixing Frames To Links

Affixing Frames To Links

- In order to describe the location of each link relative to its neighbours, each link i should have a frame {i}.
- The selection of frame {i} is arbitrary, but for the convenience of calculation, we introduce the general definition of the frame attached to a link.

Intermediate Links in the Chain

1. The $\hat{Z}$-axis of frame {i}, called $\hat{Z}_i$, is coincident with the joint axis i. The origin of frame {i} is located where the a_i perpendicular intersects the joint axis i (i.e. the starting point of the link).

2. $\hat{X}_i$ points along a_i in the direction from joint i to joint $i+1$.

3. $\hat{Y}_i$ is formed by the right-hand rule to complete the {i} frame.

- NB: when the selections of $\hat{X}_i$, $\hat{Y}_i$, $\hat{Z}_i$ are arbitrary, copy the settings from {i+1} (i.e. $\hat{X}_{i+1}$, $\hat{Y}_{i+1}$, $\hat{Z}_{i+1}$) as much as possible.

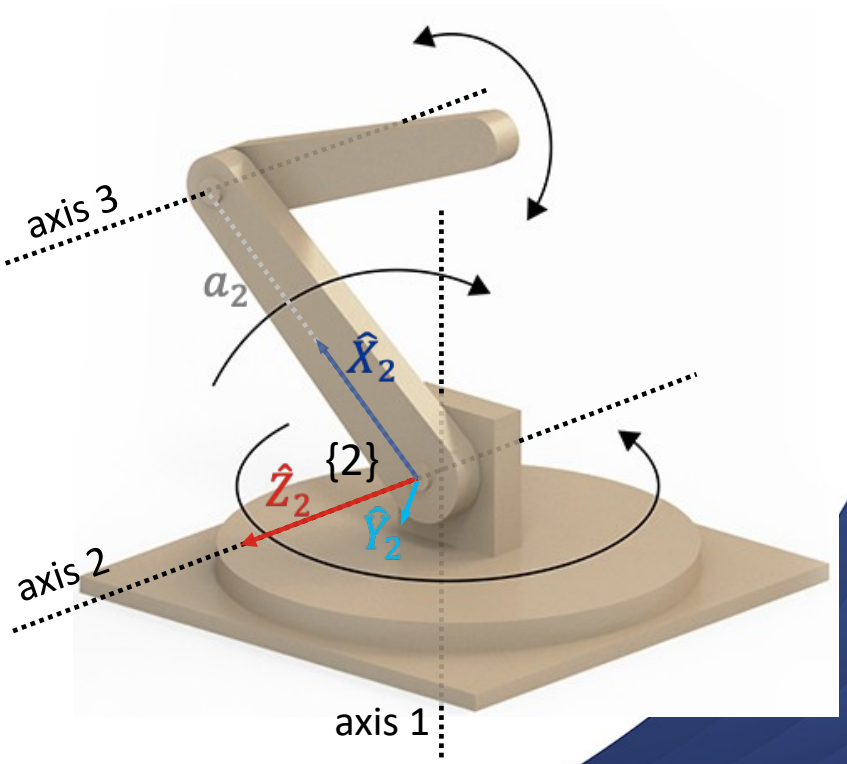

First and Last Links in the Chain

We attach a frame to the base of the robot, or link 0, called frame {0}. This frame does not move; for the problem of arm kinematics, it can be considered the reference frame. We may describe the position of all other link frames in terms of this frame .

Frame {0} is arbitrary, so it always simplifies matters to choose $\hat{Z}_0$, along axis 1 and when joint 1 is at the default position, frame {0} coincides with frame {1}.

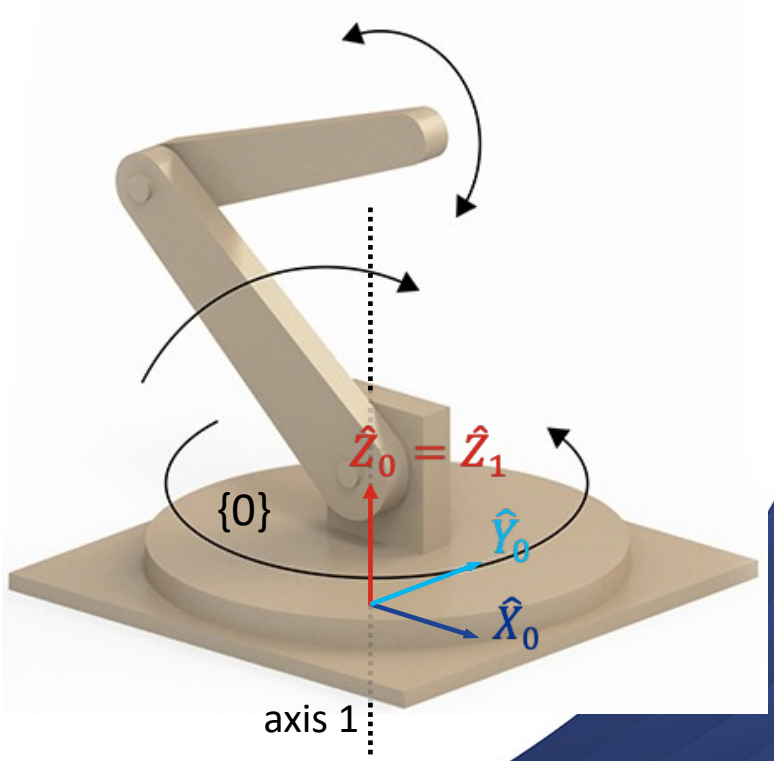

Example

A robot has three degrees of freedom and one prismatic joint (moving joint).

Assign the link frames to the robot.

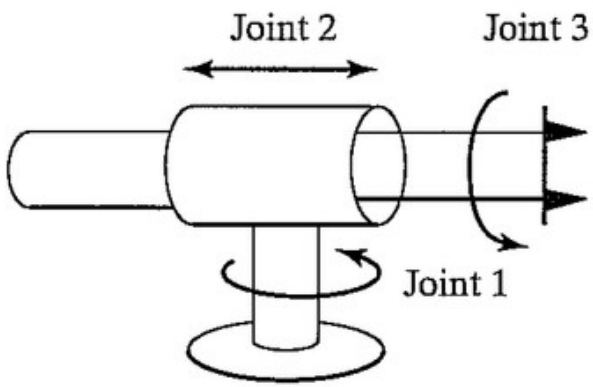

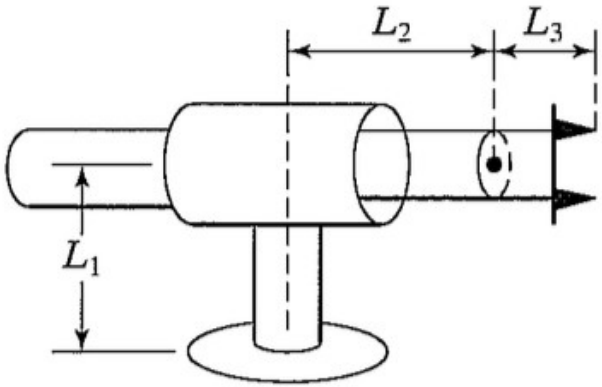

Example

A robot has three degrees of freedom and one prismatic joint (moving joint).

Assign the link frames to the robot.

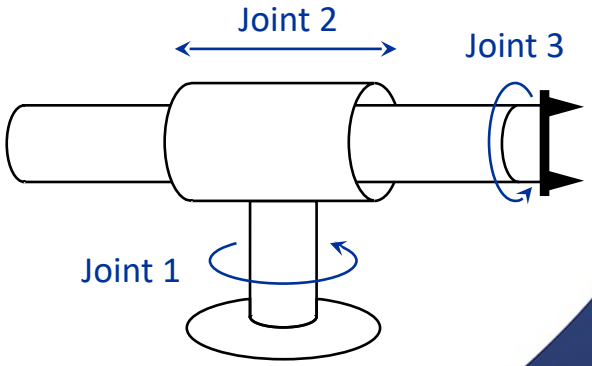

Example

- Frame {0} and frame {0} are shown as exactly coincident, because the robot is drawn for the position $\theta_1 = 0$.
- Note that frame {0}, although not at the bottom of the robot, is nonetheless affixed to link 0, the non-moving part of the robot. It is sufficient that frame {0} be attached anywhere to the non-moving link 0.
- Similarly, frame {N}, the final frame, be attached anywhere to the last link of the manipulator.

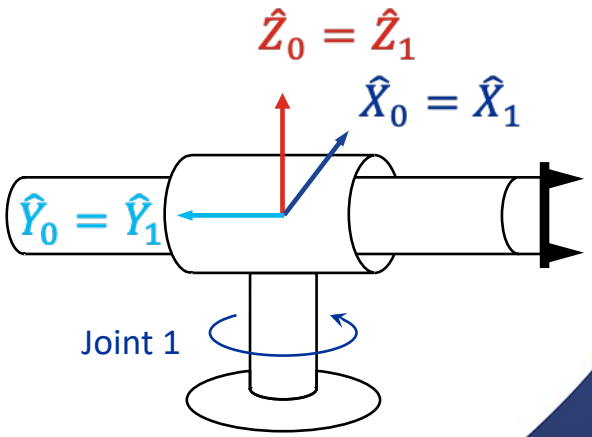

Example

Other offsets can be handled later in a general way.

- First, we assign $\hat{Z}_2$ and $\hat{Z}_3$ alone the axis 2 and 3.
- Because axis 2 and 3 are collinear, so, $\hat{X}_2$, $\hat{X}_3$, $\hat{Y}_2$, and $\hat{Y}_3$ are arbitrary. For simplicity of calculation, we assign $\hat{X}_2 = \hat{X}_3 = \hat{X}_1$.
- Finally, determine $\hat{Y}_2$ and $\hat{Y}_3$ according to the right-hand rule.

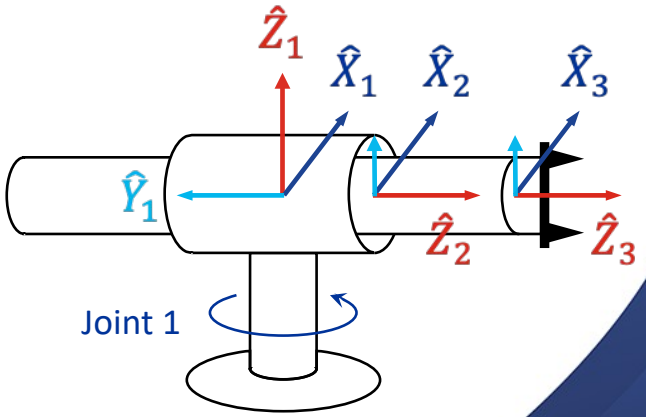

Example

Assign the link frames to the three-link planar arm.

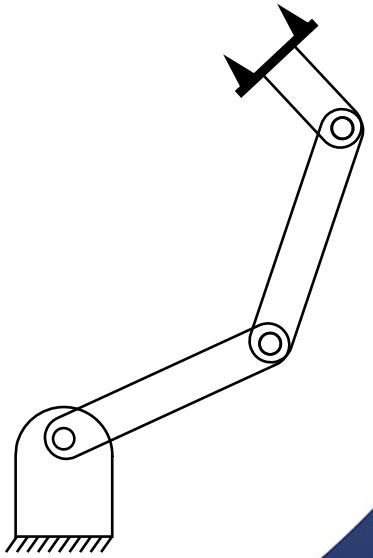

Example

1. All axes are perpendicular to the screen, so $\hat{Z}_{0\ to\ 3}$ also perpendicular to the screen.
2. $\hat{X}_0$ is arbitrary, so we assign it to right.
3. $\hat{X}_1$, $\hat{X}_2$, and $\hat{X}_3$ are alone with a_1, a_2, and a_3 respectively.
4. Finally, determine $\hat{Y}_2$ and $\hat{Y}_3$ according to the right-hand rule.

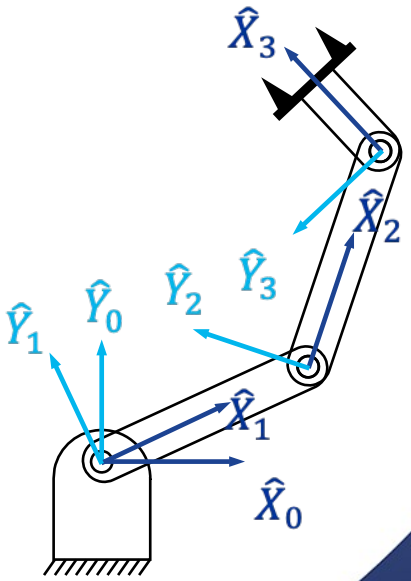

Summary of Link Parameters in Link Frame Form

Given link frames, we can redefine the D-H link parameters:

- a_i = the distance from $\hat{Z}_i$ to $\hat{Z}_{i+1}$ measured along $\hat{X}_i$
- α_i = the angle from $\hat{Z}_i$ to $\hat{Z}_{i+1}$ measured about $\hat{X}_i$
- d_i = the distance from $\hat{X}_{i-1}$ to $\hat{X}_i$ measured along $\hat{Z}_i$
- θ_i = the angle from $\hat{X}_{i-1}$ to $\hat{X}_i$ measured about $\hat{Z}_i$

Forward Kinematics

Forward Kinematics

Given the link parameters (i.e. L_1, L_2, L_3, θ_1, θ_2, θ_3), what is the state of the end-effector?

Suppose the end-effector is the link 4, the question is to find ${}^{0}_{4}T$.

NB: because the frame of the end-effector is arbitrary, we assign {4}={3}.

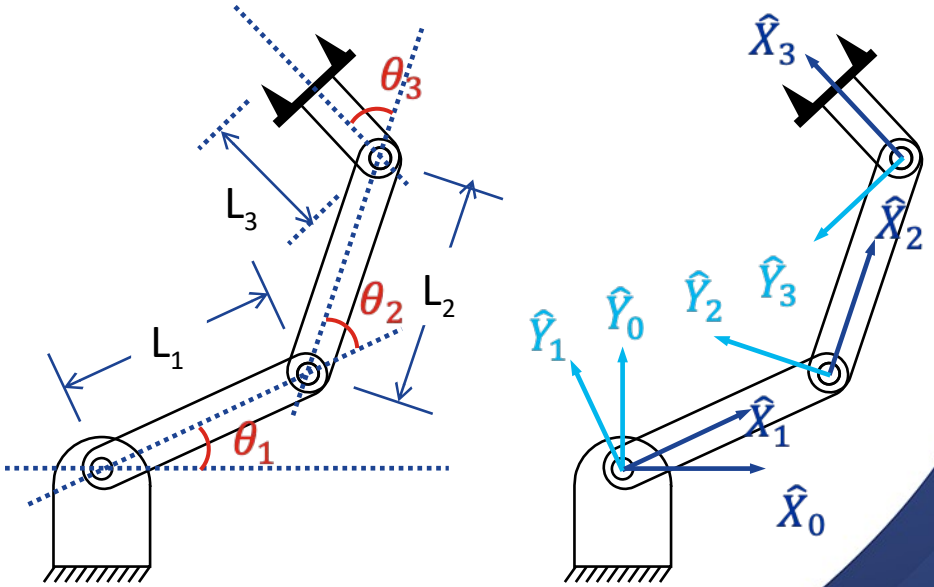

Forward Kinematics

First, we compute each of the link transformations:

$$ {}^{0}_{1}T = \begin{bmatrix} {}^{0}_{1}R & {}^{0}P_1 \\ 0 & 1 \end{bmatrix} = \begin{bmatrix} R_Z(\theta_1) & 0 \\ 0 & 1 \end{bmatrix} $$

$$ = \begin{bmatrix} \cos\theta_1 & -\sin\theta_1 & 0 & 0 \\ \sin\theta_1 & \cos\theta_1 & 0 & 0 \\ 0 & 0 & 1 & 0 \\ 0 & 0 & 0 & 1 \end{bmatrix} $$

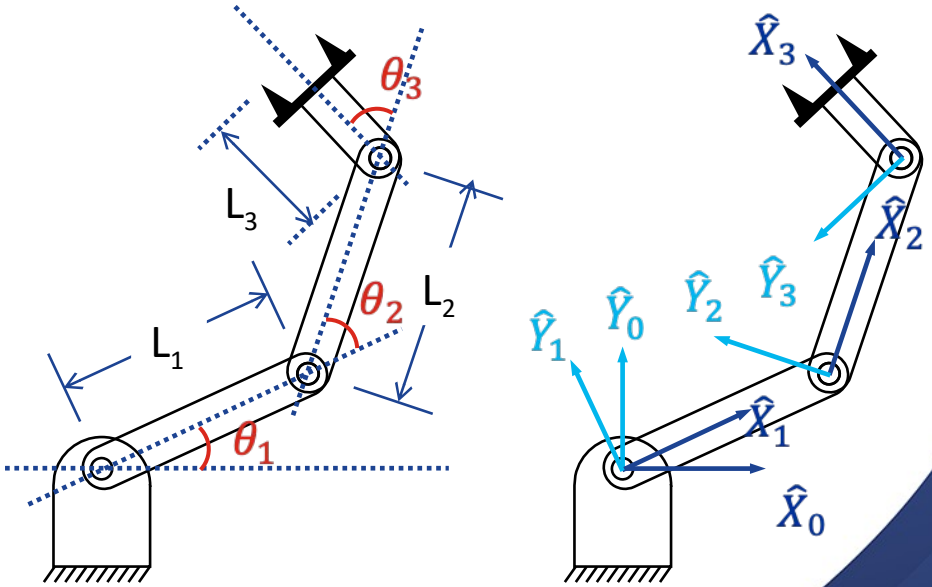

Forward Kinematics

Because by definition, $\hat{X}_1$ is alone a_1, so L_1 is at x position. If $d_1 \neq 0$, d_1 should be at z position.

First, we compute each of the link transformations:

$$ {}^1_2T = \begin{bmatrix} {}^1_2R & {}^1P_2 \\ 0 & 1 \end{bmatrix} = \begin{bmatrix} R_Z(\theta_2) & D(a_1) \\ 0 & 1 \end{bmatrix} $$

$$ = \begin{bmatrix} \cos\theta_2 & -\sin\theta_2 & 0 & L_1 \\ \sin\theta_2 & \cos\theta_2 & 0 & 0 \\ 0 & 0 & 1 & 0 \\ 0 & 0 & 0 & 1 \end{bmatrix} $$

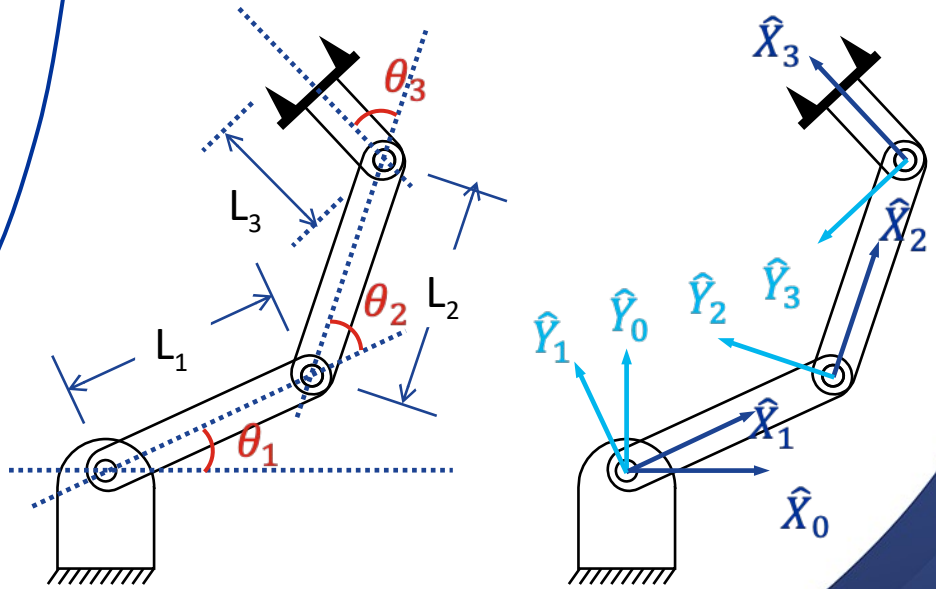

Forward Kinematics

First, we compute each of the link transformations:

$$ {}^{2}_{3}T = \begin{bmatrix} {}^{2}_{3}R & {}^{2}P_3 \\ 0 & 1 \end{bmatrix} = \begin{bmatrix} R_Z(\theta_3) & D(a_2) \\ 0 & 1 \end{bmatrix} $$

$$ = \begin{bmatrix} \cos\theta_3 & -\sin\theta_3 & 0 & L_2 \\ \sin\theta_3 & \cos\theta_3 & 0 & 0 \\ 0 & 0 & 1 & 0 \\ 0 & 0 & 0 & 1 \end{bmatrix} $$

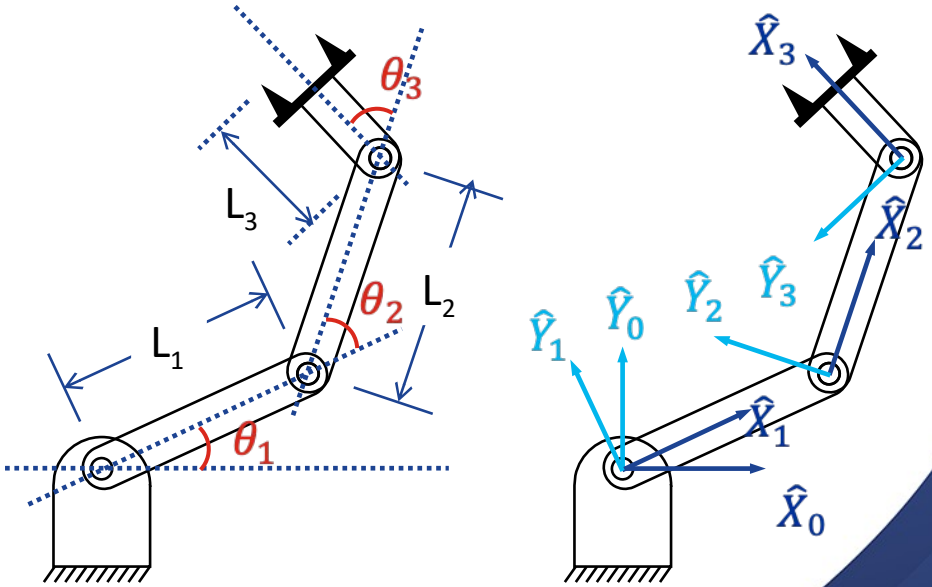

Forward Kinematics

First, we compute each of the link transformations:

$$ {}^{3}_{4}T = \begin{bmatrix} 1 & 0 \\ 0 & 1 \end{bmatrix} = \begin{bmatrix} 1 & 0 & 0 & 0 \\ 0 & 1 & 0 & 0 \\ 0 & 0 & 1 & 0 \\ 0 & 0 & 0 & 1 \end{bmatrix} $$

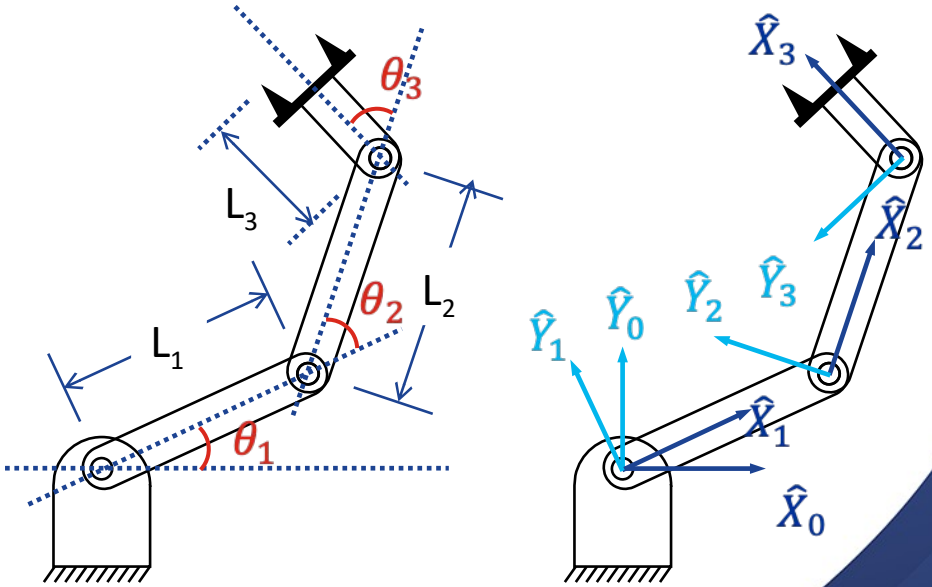

Forward Kinematics

They give ${}^{0}_{4}T = {}^{0}_{1}T\,{}^{1}_{2}T\,{}^{2}_{3}T\,{}^{3}_{4}T$

$$
{}^{0}_{4}T = \begin{bmatrix} \cos(\theta_1+\theta_2+\theta_3) & -\sin(\theta_1+\theta_2+\theta_3) & 0 & L_1\cos(\theta_1)+L_2\cos(\theta_1+\theta_2) \\ \sin(\theta_1+\theta_2+\theta_3) & \cos(\theta_1+\theta_2+\theta_3) & 0 & L_1\sin(\theta_1)+L_2\sin(\theta_1+\theta_2) \\ 0 & 0 & 1 & 0 \\ 0 & 0 & 0 & 1 \end{bmatrix}
$$

NB: ${}^{0}_{4}T$ shows the configuration of the end-effector.

The position ${}^{0}P_{end} = [L_1\cos(\theta_1)+L_2\cos(\theta_1+\theta_2) \quad L_1\sin(\theta_1)+L_2\sin(\theta_1+\theta_2) \quad 0]^T$

The direction vector of end-effector:

$$
{}^{0}\hat{X}_3 = [\cos(\theta_1+\theta_2+\theta_3) \quad \sin(\theta_1+\theta_2+\theta_3) \quad 0]^T
$$

Derivation of Link Transformations

1495 UNIVERSITY OF ABERDEEN

Derivation of Link Transformations

The previous example focused on the simplest case: all $\hat{Z}_i$ are parallel.

Given any two frames {i} and {i+1}, we need to find a generalised transformation ${}^{i-1}_{i}T$.

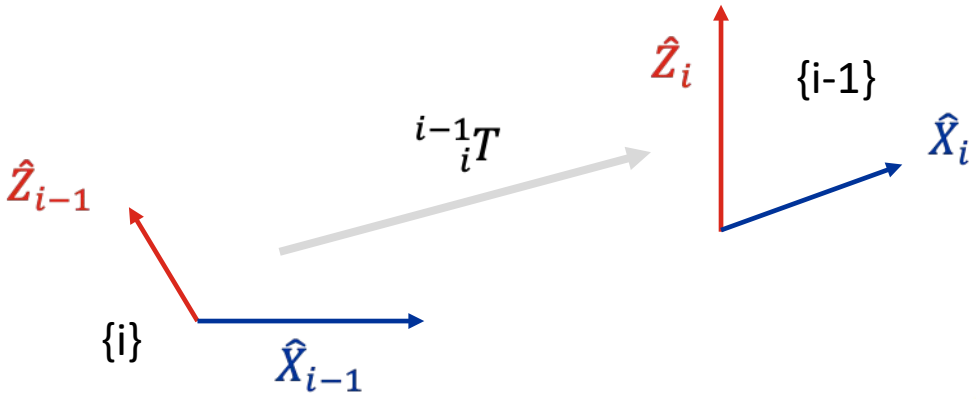

Derivation of Link Transformations

To find the generalised transformation ${}^{i-1}_{i}T$, we broken the kinematics problem into n subproblems by defining intermediate frames {P}, {Q}, and {R}.

1. {R} differs from {i-1} by α_{i-1}
2. {Q} differs from {R} by a_{i-1}
3. {P} differs from {Q} by θ_i
4. {i} differs from {P} by d_i

So, ${}^{i-1}_{i}T = {}^{i-1}_{R}T\,{}^{R}_{Q}T\,{}^{Q}_{P}T\,{}^{P}_{i}T$

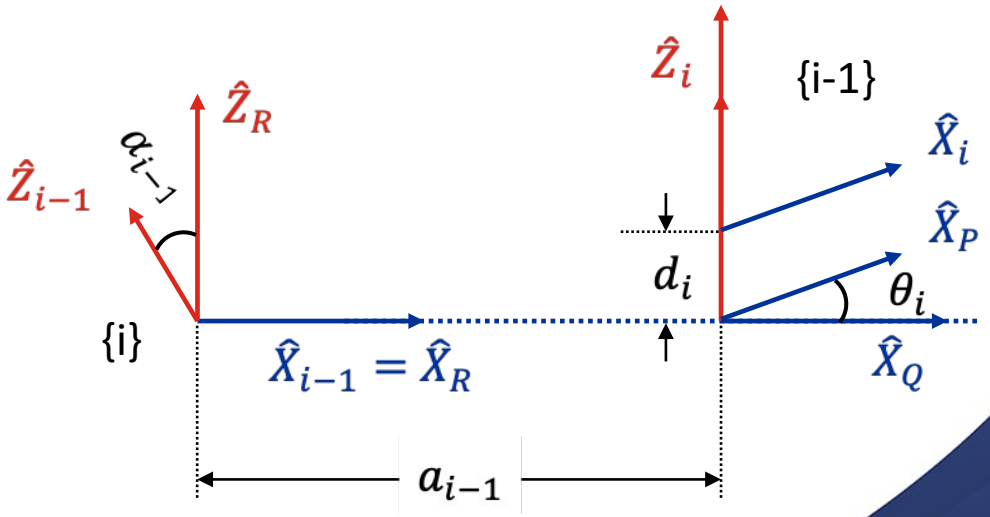

Derivation of Link Transformations

Considering each of these transformations:

$$ {}^{i-1}_{\ \ i}T = {}^{i-1}_{\ \ R}T\,{}^{R}_{Q}T\,{}^{Q}_{P}T\,{}^{P}_{i}T $$

$$ = R_X(\alpha_{i-1})D_X(a_{i-1})R_Z(\theta_i)D_Z(d_i) $$

$$ = \begin{bmatrix} R_X(\alpha_{i-1}) & D_X(a_{i-1}) \\ 0 & 1 \end{bmatrix} \begin{bmatrix} R_Z(\theta_i) & D_Z(d_i) \\ 0 & 1 \end{bmatrix} $$

$$ = \begin{bmatrix} 1 & 0 & 0 & a_{i-1} \\ 0 & \cos\alpha_{i-1} & -\sin\alpha_{i-1} & 0 \\ 0 & \sin\alpha_{i-1} & \cos\alpha_{i-1} & 0 \\ 0 & 0 & 0 & 1 \end{bmatrix} \begin{bmatrix} \cos\theta_i & -\sin\theta_i & 0 & 0 \\ \sin\theta_i & \cos\theta_i & 0 & 0 \\ 0 & 0 & 1 & d_i \\ 0 & 0 & 0 & 1 \end{bmatrix} $$

1. {R} differs from {i-1} by α_{i-1}
2. {Q} differs from {R} by a_{i-1}
3. {P} differs from {Q} by θ_i
4. {i} differs from {P} by d_i

Derivation of Link Transformations

Then, the final solution is :

$$ {}^{i-1}_{i}T = \begin{bmatrix} \cos\theta_i & -\sin\theta_i & 0 & a_{i-1} \\ \sin\theta_i \cos\alpha_{i-1} & \cos\theta_i \cos\alpha_{i-1} & -\sin\alpha_{i-1} & -\sin\alpha_{i-1}\, d_i \\ \sin\theta_i \sin\alpha_{i-1} & \cos\theta_i \sin\alpha_{i-1} & \cos\alpha_{i-1} & \cos\alpha_{i-1}\, d_i \\ 0 & 0 & 0 & 1 \end{bmatrix} $$

By using the generalised transformation ${}^{i-1}_{i}T$, given any group of D-H parameters, we can directly write the corresponding transformation.

Example

Solve the kinematics of the PUMA 560.

PUMA 560 is a robot with six degrees of freedom and all rotational joints.

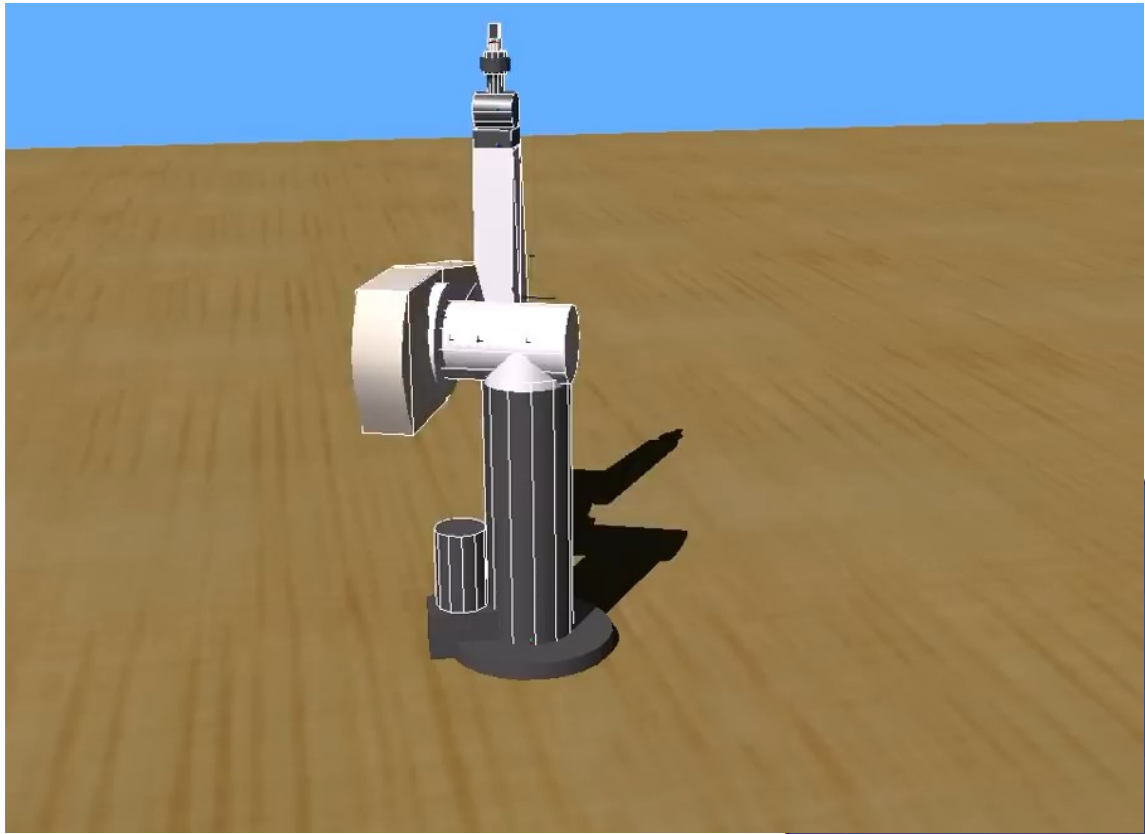

Example

Specifically, axis 4, axis 5 and axis 6 intersect at one point.

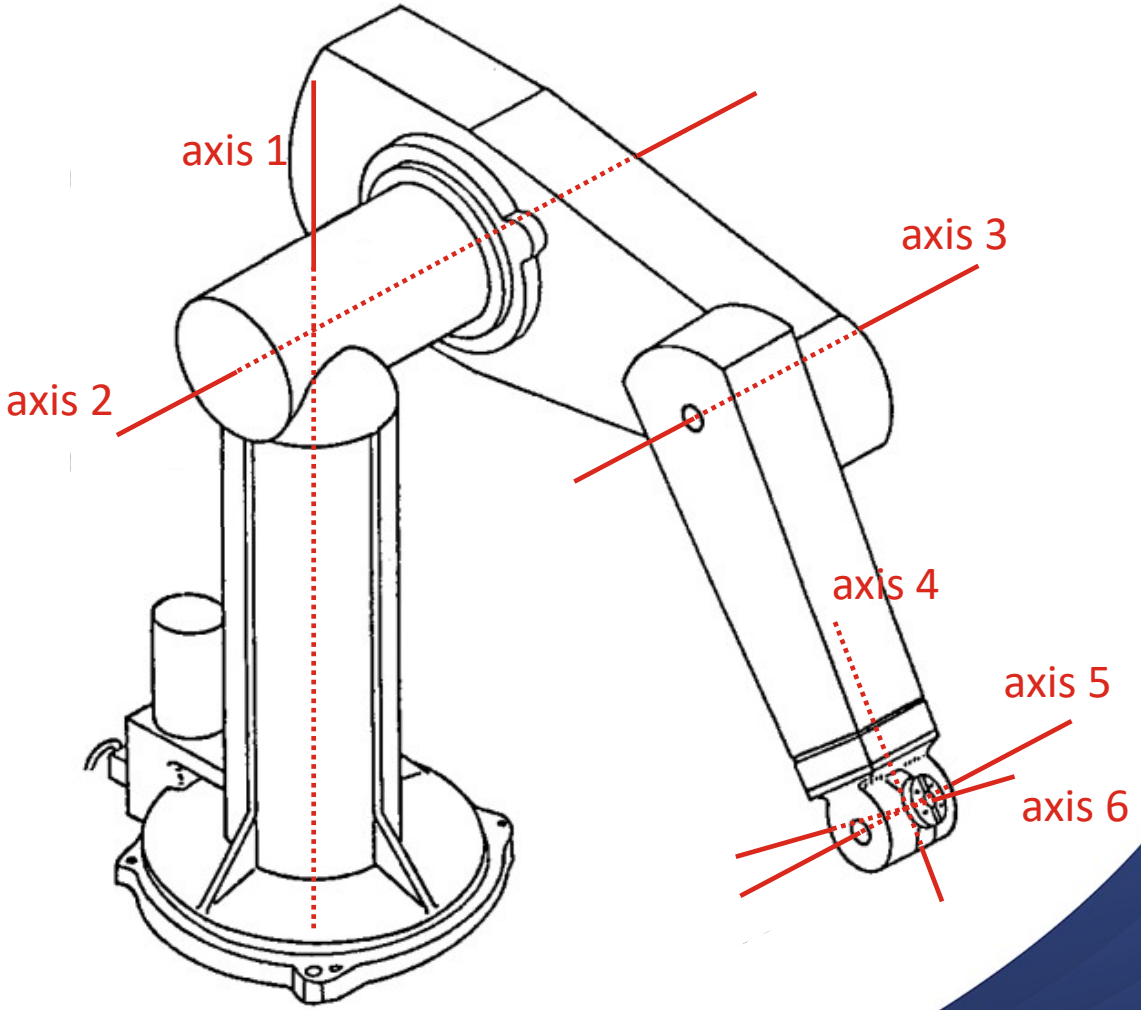

Example

1. We assign the $\hat{Z}_0$ to $\hat{Z}_6$ alone the axes.

- $\hat{Z}_0$ is arbitrary so we assign $\hat{Z}_0 = \hat{Z}_1$.
- You may have the opposite direction of $\hat{Z}_i$, which is no problem.

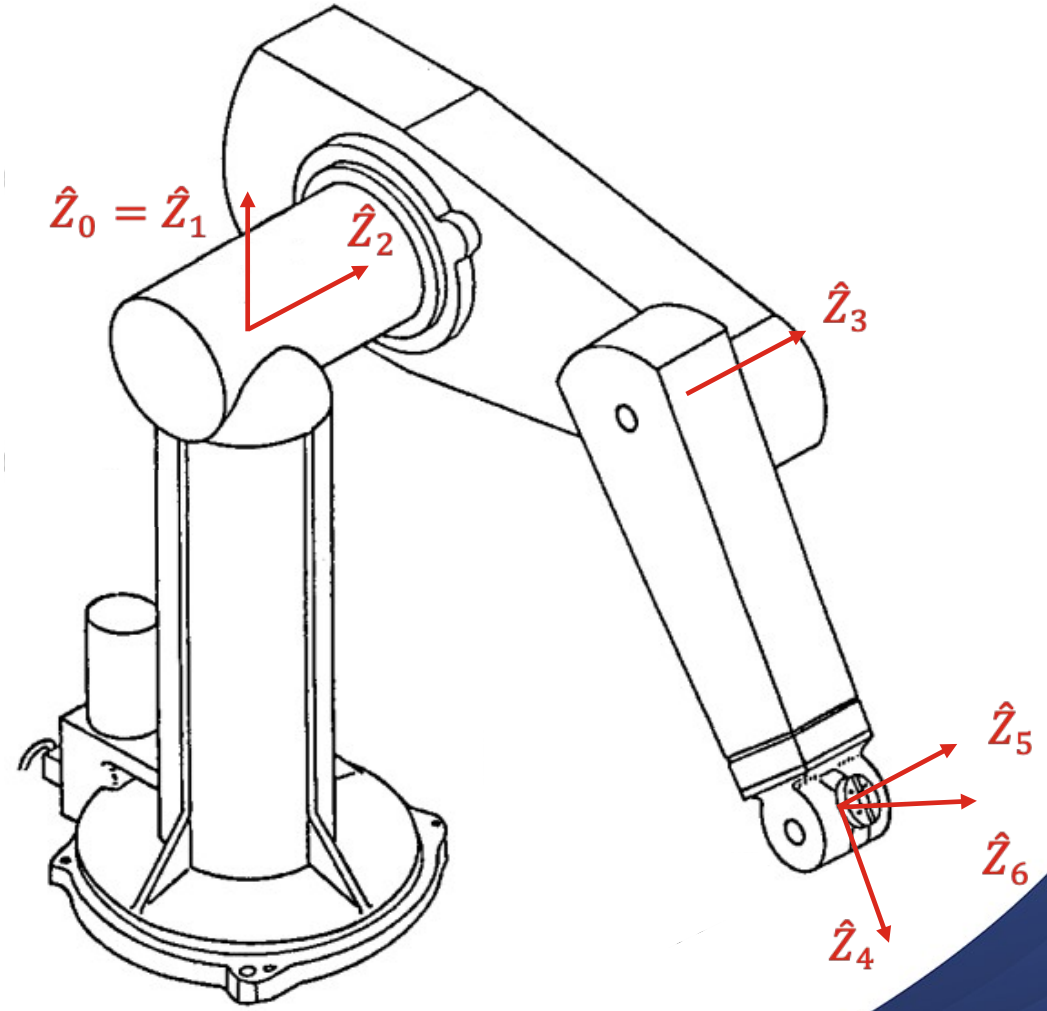

Example

2. We assign the $\hat{X}_0$ to $\hat{X}_6$ alone the a_0 to a_6 .

- In the pic, $\hat{X}_0$, $\hat{X}_1$ and $\hat{X}_2$ overlap, but when the links rotate, they will separate.
- $\hat{X}_4$, $\hat{X}_5$ and $\hat{Z}_6$ overlap.
- $\hat{X}_6$ and $\hat{Z}_4$ overlap.
- $\hat{Y}_0$ to $\hat{Y}_6$ are determined by right-hand rule.

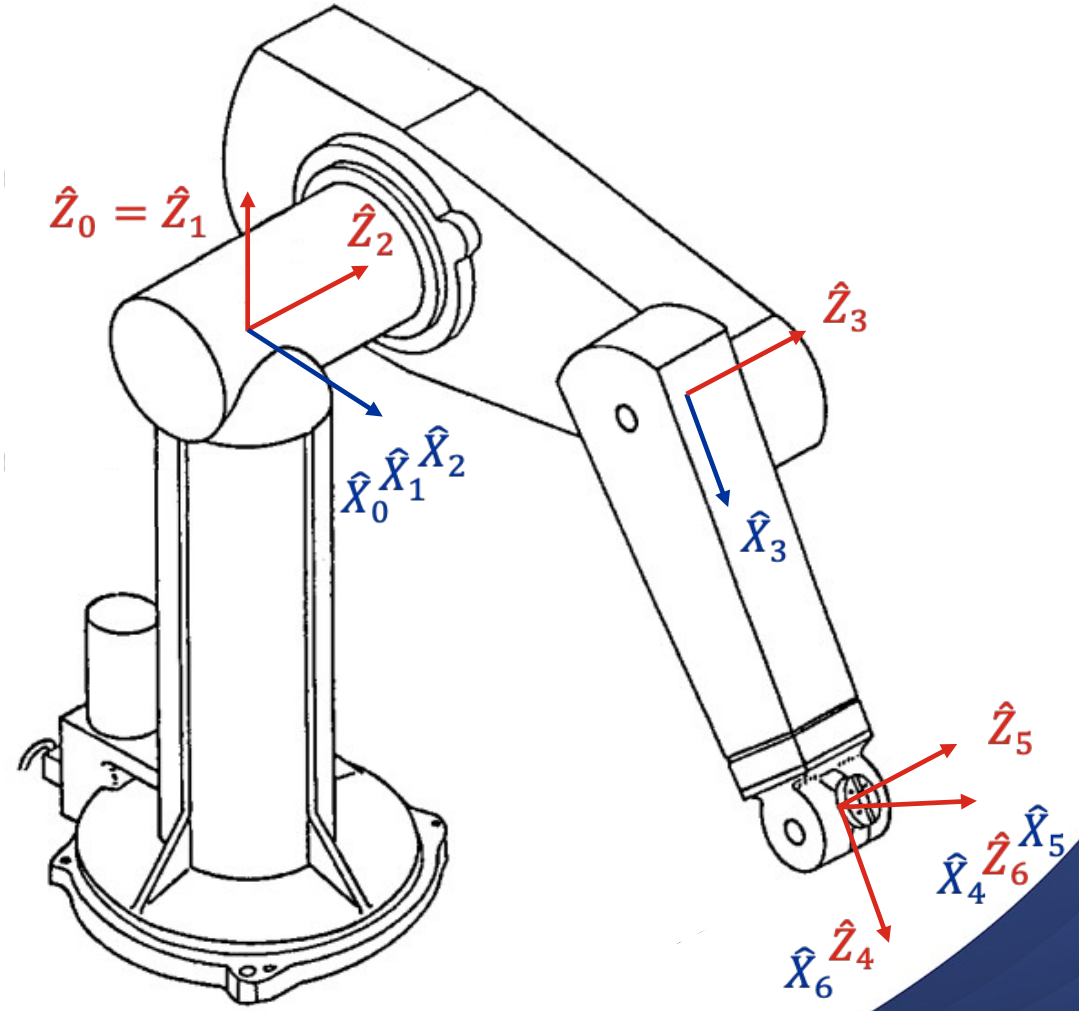

Example

3. We create D-H table.

i	α_{i-1}	a_{i-1}	d_i	θ_i
1				
2				
3				
4				
5				
6				

i	α_{i-1}	a_{i-1}	d_i	θ_i
1				
2				
3				
4				
5				
6				

i	α_{i-1}	a_{i-1}	d_i	θ_i
1				
2				
3				
4				
5				
6				

i	α_{i-1}	a_{i-1}	d_i	θ_i
1				
2				
3				
4				
5				
6				

i	α_{i-1}	a_{i-1}	d_i	θ_i
1				
2				
3				
4				
5				
6				

i	α_{i-1}	a_{i-1}	d_i	θ_i
1	0°			
2	-90°			
3	0°			
4	-90°			
5	90°			
6	-90°			

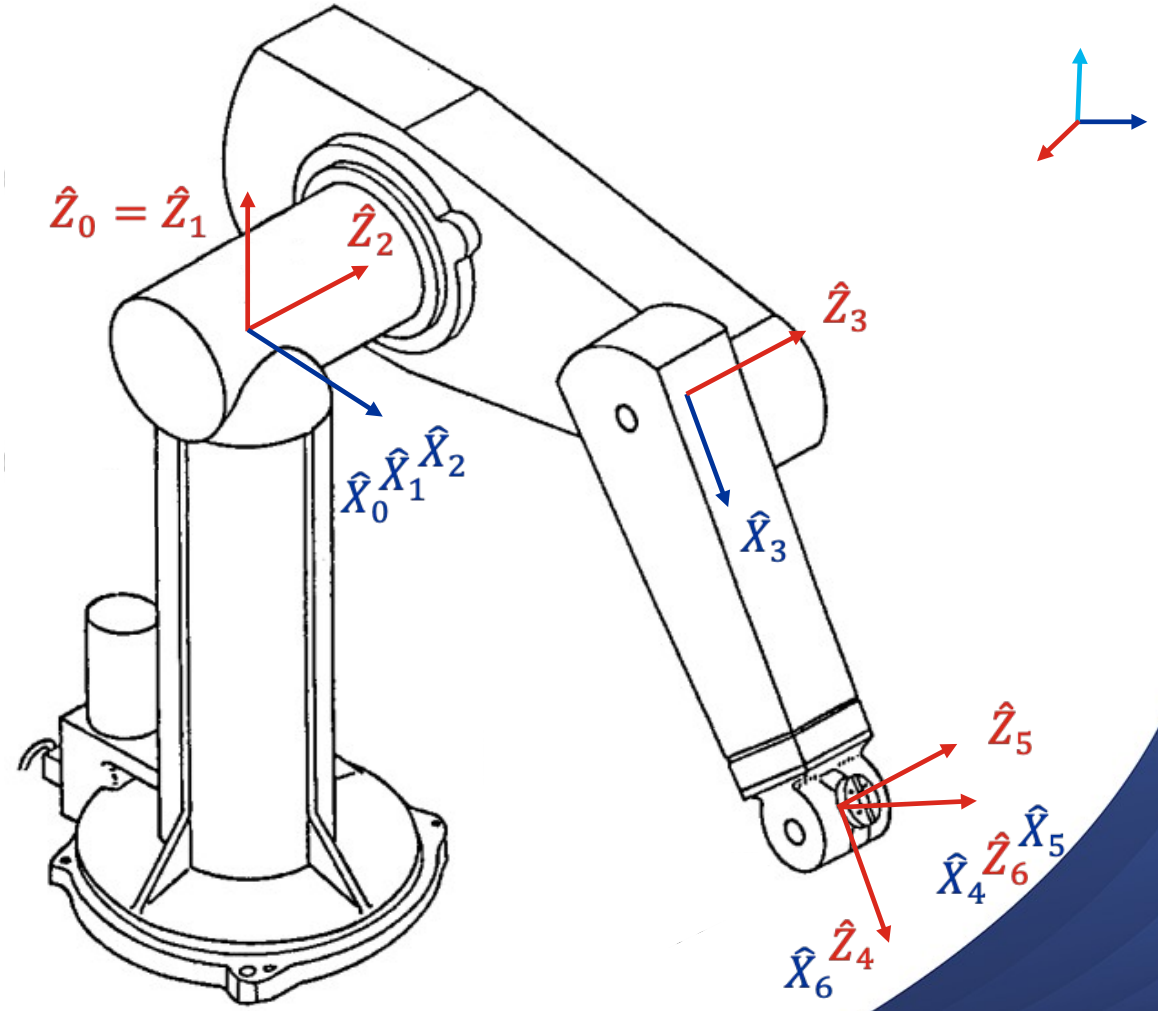

Example

3. We create D-H table.

i	α_{i-1}	a_{i-1}	d_i	θ_i
1	0°	0	0	θ_1
2	-90°	0	0	θ_2
3	0°	a_2	d_3	θ_3
4	-90°	a_3	0	θ_4
5	90°	0	0	θ_5
6	-90°	0	0	θ_6

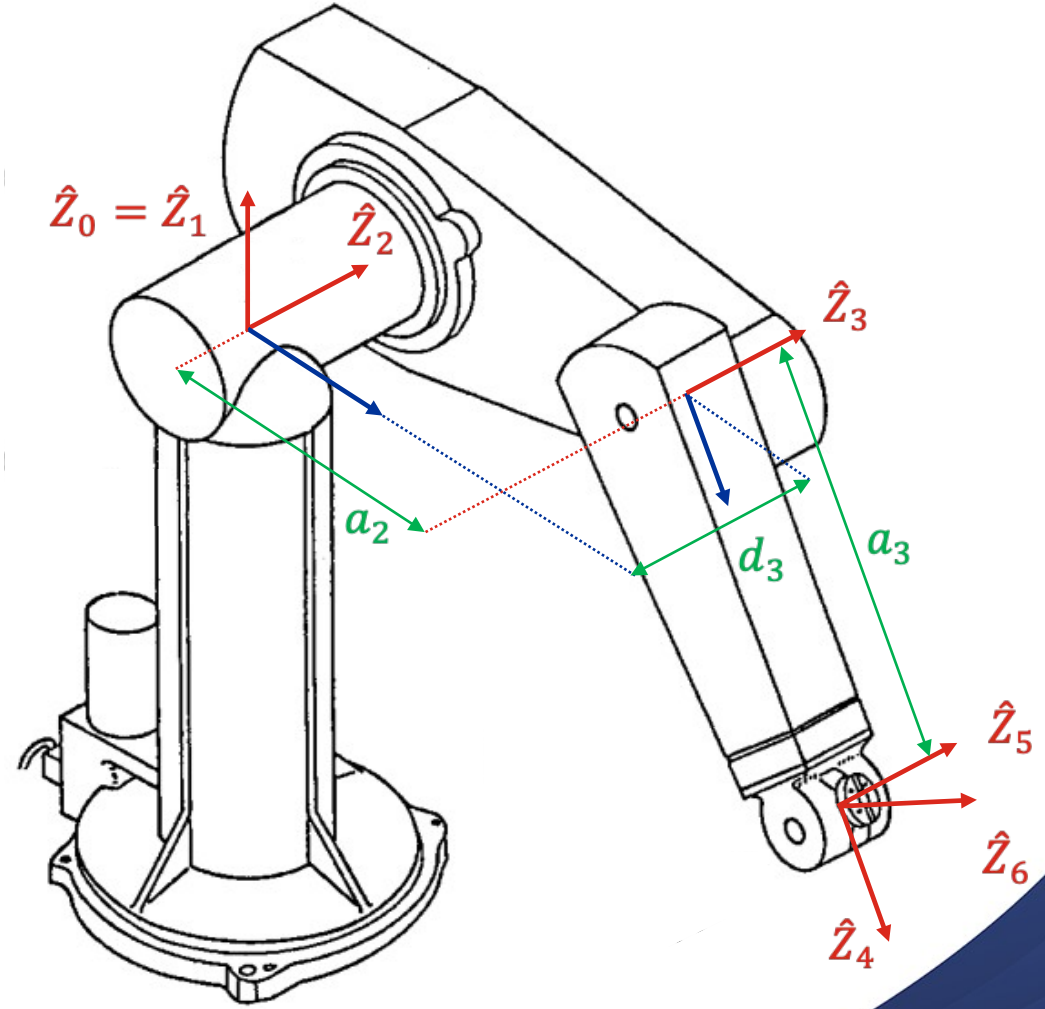

Example

4. we compute each of the link transformations:

$$ {}^{0}_{1}T = \begin{bmatrix} \cos\theta_1 & -\sin\theta_1 & 0 & a_{i-1} \\ \sin\theta_1 \cos\alpha_0 & \cos\theta_1 \cos\alpha_0 & -\sin\alpha_0 & -\sin\alpha_0\, d_i \\ \sin\theta_1 \sin\alpha_0 & \cos\theta_1 \sin\alpha_0 & \cos\alpha_0 & \cos\alpha_0\, d_i \\ 0 & 0 & 0 & 1 \end{bmatrix} $$

$$ = \begin{bmatrix} \cos\theta_1 & -\sin\theta_1 & 0 & 0 \\ \sin\theta_1 & \cos\theta_1 & 0 & 0 \\ 0 & 0 & 1 & 0 \\ 0 & 0 & 0 & 1 \end{bmatrix} $$

i	α_{i-1}	a_{i-1}	d_i	θ_i
1	0°	0	0	θ_1
2	-90°	0	0	θ_2
3	0°	a_2	d_3	θ_3
4	-90°	a_3	0	θ_4
5	90°	0	0	θ_5
6	-90°	0	0	θ_6

Example

4. we compute each of the link transformations:

$$ {}^{1}_{2}T = \begin{bmatrix} \cos\theta_2 & -\sin\theta_2 & 0 & 0 \\ 0 & 0 & 1 & 0 \\ -\sin\theta_2 & -\cos\theta_1 & 0 & 0 \\ 0 & 0 & 0 & 1 \end{bmatrix} $$

$$ {}^{4}_{5}T = \begin{bmatrix} \cos\theta_5 & -\sin\theta_5 & 0 & 0 \\ 0 & 0 & 1 & 0 \\ \sin\theta_5 & -\cos\theta_5 & 0 & 0 \\ 0 & 0 & 0 & 1 \end{bmatrix} $$

$$ {}^{2}_{3}T = \begin{bmatrix} \cos\theta_2 & -\sin\theta_2 & 0 & a_2 \\ \sin\theta_2 & \cos\theta_1 & 0 & 0 \\ 0 & 0 & 1 & d_3 \\ 0 & 0 & 0 & 1 \end{bmatrix} $$

$$ {}^{5}_{6}T = \begin{bmatrix} \cos\theta_6 & -\sin\theta_6 & 0 & 0 \\ 0 & 0 & 1 & 0 \\ -\sin\theta_6 & -\cos\theta_6 & 0 & 0 \\ 0 & 0 & 0 & 1 \end{bmatrix} $$

$$ {}^{3}_{4}T = \begin{bmatrix} \cos\theta_3 & -\sin\theta_3 & 0 & a_3 \\ 0 & 0 & 1 & 0 \\ -\sin\theta_3 & -\cos\theta_3 & 0 & 0 \\ 0 & 0 & 0 & 1 \end{bmatrix} $$

Finally, ${}^{0}_{6}T = {}^{0}_{1}T\,{}^{1}_{2}T\,{}^{2}_{3}T\,{}^{3}_{4}T\,{}^{4}_{5}T\,{}^{5}_{6}T$

Conclusion

Forward Kinematics: Understanding the robot's positional data based on joint parameters.

Link Description: Detailing each segment of the robot for kinematic analysis.

Affixing Frames to Links: Establishing reference frames to accurately describe robot geometry.

Derivation of Link Transformations: Calculating the mathematical relationships between links.